QUICKFROST™

SWITCHABLE PRIVACY GLASS

PRODUCT DATA

Goldray Glass QuickFrost™ system is a switchable privacy glass assembly that allows a glass lite to go from opaque privacy to non-privacy glass at the flick of a switch. This product has quickly gained popularity in commercial environments, including corporate and healthcare settings due to its ability to allow light transmission, while quickly providing privacy when needed.

Available in two colors, white or grey.

INSTALLATION

Edge(s) with bus bars must be installed in a channel at least ½" (12mm) deep with electrical components physically separated from the hardware. A neutral cure silicone is required for installing butt jointed lites.

Installation Method: Panels must be hard-wired using the 22 AWG wire leads installed on the glass. All panels must be wired by a certified electrician.

INSTALLATION MATERIALS

When you order QuickFrost™, Goldray Glass will supply the following materials (the entire system is CSA/UL certified):

- A 24 hour programmable timer switch
- Power control boxes
- Conductive hinges (if needed)
- The QuickFrost™ panels needed for the project

GOLDRAY

GLASS TOLERANCE

SI Designation	Traditional Designation	Glass Makeup Thickness Range				Glass Weight	
		min (mm)	max (mm)	min (in)	max (in)	kg/sqm	lb/sqft
3mm + 3mm	1/8in + 1/8in	7.05	9.02	0.277	0.355	16.55	3.39
4mm + 4mm	5/32in + 5/32in	8.77	10.60	0.345	0.417	19.58	4.01
5mm + 5mm	3/16in + 3/16in	10.35	12.32	0.407	0.485	23.68	4.85
6mm + 6mm	1/4in + 1/4in	12.33	14.62	0.485	0.576	28.61	5.86

ELECTRICAL SPECIFICATIONS

All electrical components needed to install the QuickFrost™ system, such as switches, control boxes, and QuickFrost™ panels will be provided by Goldray Glass.

- **Supply Voltage:** Goldray Glass recommends using 36 VAC to 60 VAC to electrify the panels (any voltage ≥ 65 VAC & DC current will damage the film). We recommend turning the QuickFrost™ panel off for at least one hour every 24 hours.
- **Energy Consumption:** The glass panels use less than 4 watts per square meter.
- **Circuit Design:** Goldray Glass recommends that the panels are installed in parallel NOT in series (See Exhibit A).
- **Switching:** Less than 1 second
- **Light Transmission*:** On (80%) off (50%)
- **Haze*:** On (<5%) Off (>90%)
- **Working Temperature:** -15°C to 60°C / 5°F to 140°F
- **Life Span:** Off (lifetime) On (>50,000 hours)

*This will vary with the total thickness and glass type used to produce the QuickFrost Panel

Exhibit A - Panels installed in parallel:

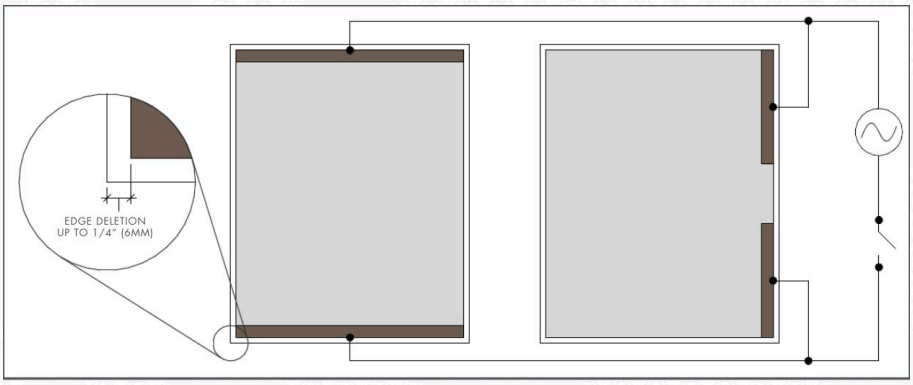

GOLDRAY

CONDUCTIVE HINGE DETAILS

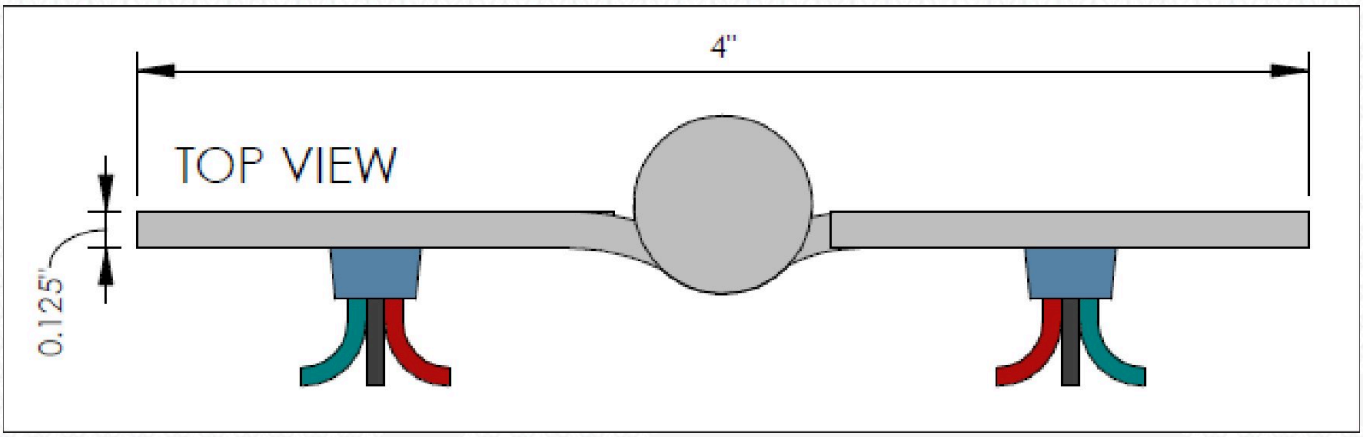

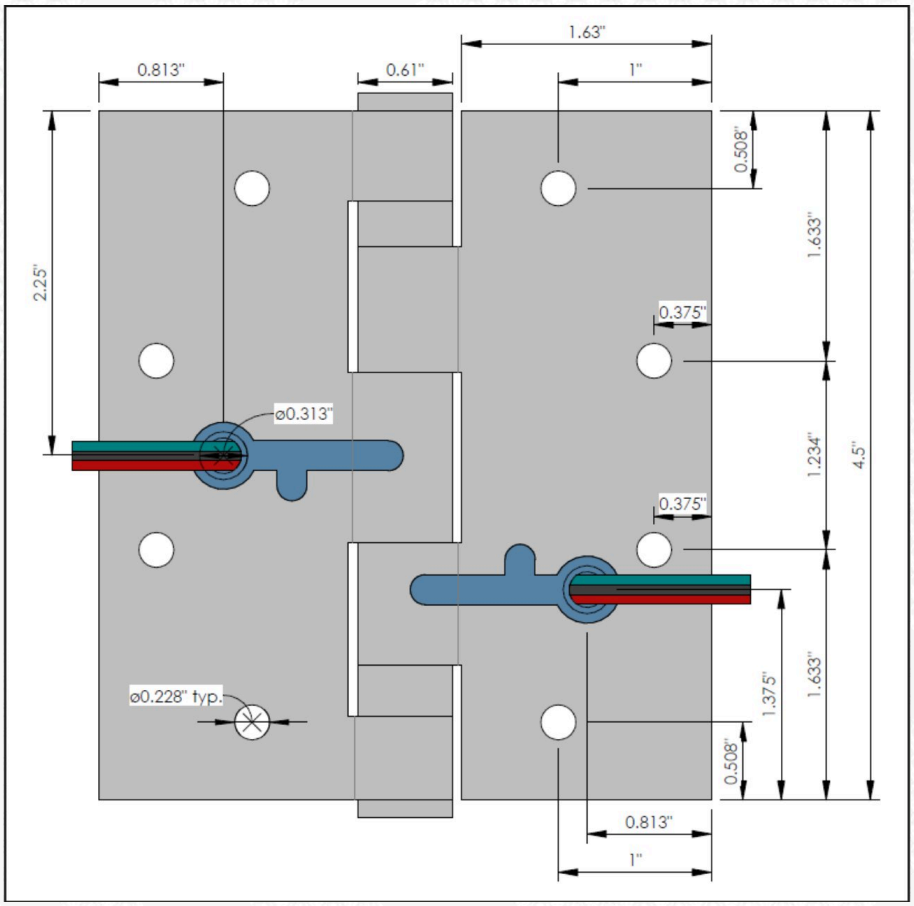

GOLDRAY

ORDERING QUICKFROST™

Bus Bar Location: There are two bus bar location options for QuickFrost™ (see Exhibit B); please specify the desired bus bar location when ordering. Additional restrictions apply based on panel size and glass makeup. Please contact Goldray Glass for more information.

Exhibit B - Bus Bar Location Options:

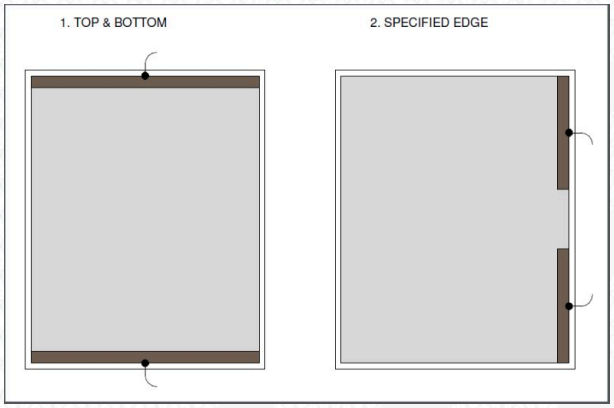

PRODUCT FEATURES

- Can be installed using a variety of framing solutions
- Non-porous surface; easy to clean and maintain
- Save on heating, air conditioning, and lighting costs
- No moving parts

SUSTAINABILITY

- HPD and LEED documents available
- Clean Air Gold Certified - California Department of Public Health (CDPH) Standard Method v1.2: Private Office and School Classroom.

APPLICABLE SPECIFICATIONS

Goldray's QuickFrost™ system conforms to UL STD 60335-01 certified to CSA STD C22.2NO. 60335-1.

- ASTM C1036 - Specification for Flat Glass
- ASTM C1048 - Specification for Heat-Treated Flat Glass - Kind HS, Kind FT Coated and Uncoated Glass (when heat-treated)
- ASTM C1172 - Specification for Laminated Architectural Flat Glass

GLASS CHARACTERISTICS

- Size Availability: minimum size - 12"x12". Maximum size - 59"x110"** (Restrictions apply based on glass makeup).
- Glass Thickness: Will vary based on glass lites used.
- Glass Edge Condition: There will be up to a 6mm (1/4") clear area around the perimeter of glass. The bus bar extends 10mm (3/8") into the film.
- Privacy Considerations: In the "OFF" state, the glass lite offers a privacy range >3cm from the glass surface.
- Available colors: White or Grey
  QuickFrost Grey: 47" x 110"
  QuickFrost White: 59" x 110"

GOLDRAY

TECHNICAL DATA & APPLICABLE STANDARDS

	"ON" Non-Privacy State	"OFF" Privacy State
Total Light Transmittance: **	As high as 83%	> 41%
In-Line Transmittance: **	> 79%	≈ 0.1%
Haze: **	< 5%	> 90%

- Color Tolerance:1 Delta E (CIE LAB)
- ANSI Z97.1: Passed
- 16 CFR 1201: Passed

**These values will vary based on the makeup of the panel

GOLDRAY